LASWIM
威浪仕

PUMP INSTRUCTIONS FOR USE AND MAINTENANCE

WL-BHP200MS WL-BHP200TS
WL-BHP300MS WL-BHP300TS
WL-BHP400TS

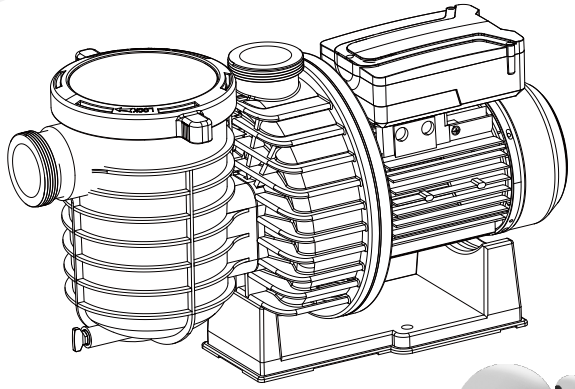

LASWIM
威浪仕
SINCE 1989

威浪仕官方微信号
gzlaswim

www.laswim.cn

1 IMPORTANT SAFETY INSTRUCTIONS

When installing and using this electrical equipment, basic safety precautions should always be followed, including the following.

READ AND FOLLOW ALL INSTRUCTIONS

WARNING

To reduce the risk of injury. Do not permit children to use this product
Risk of electrical shock. Conneced only to grounding type receptacle protected by a ground fault circit interrupter (GFCI). Contact a qualitied electrician if you cannot verify that the receptacle is proteceed by GFCI.

CAUTION

Do not bury cord. Locate cord to minimize abuse from lawmowers, hedge trimmers, and other equipment.
In case the running parts will injure people, don't make the electric pump running before the pipeline have been connected.

WARNING

To reduce the risk of electrical shock, do not use extension cord to connect unit electric supply; provide a properly located outllet.

2 INSTALLATION

Only qualified, licensed personnel should install pump and wiring.

Pump mount must:

Be located away from corrosive or flammable chemicals.

Be solid - Level - Rigid - Vibration free. (To reduce vibration and pipe stress, bolt pump to mount.)

Allow pump suction inlet height to be as close to water level as possible.

Allow use of short, direct suction pipe (To reduce friction losses).

Allow for valves in suction and discharge piping.

Have adequate floor drainage to prevent flooding.

Be protected from excess moisture.

Allow adequate access for servicing pump and piping.

NOTICE

Use thread seal tape for making all threaded connections to the pump. Do not use pipe dope; pipe dope will cause stress cracking in the pump.
Pump suction and discharge connections have molded in thread stops. DO not try to screw pipe in beyond these stops.

3 OPERATION

CAUTION

NEVER run pump dry. Running pump dry may damage seals, causing leakage and flooding. Fill pump with water before starting motor.

Before removing trap cover:



WARNING

Hazardous voltage.
Can shock,burn, or cause death.
Disconnect power before working on pump or motor.

1. STOP PUMP before proceeding.
2. CLOSE VALVES in suction and discharge pipes.
3. RELEASE ALL PRESSURE from pump and piping system.
4. NEVER tighten or loosen clamp while pump is operating!

If pump is being pressure tested, be sure pressure has been released before removing trap cover.

Do not block pump suction. To do so with body may cause severe or fatal injury.

Small children using pool must ALWAYS have close adult supervision.

Priming Pump

Release all pressure from filter, pump, and piping system; see the filter owner's manual.

In a flooded suction system (water source higher than pump), pump will prime itself when suction and discharge valves are opened.

If pump is not in a flooded suction system, remove trap cover handle ring and trap cover; fill trap and pump with water.

Do not lubricate the trap cover O-Ring. The original equipment O-Ring contains a permanent internal lubricant.

NOTICE

If you replace the O-Ring with a non-internally lubricated O-Ring, you may need to apply a silicone based lubricant.
Clean and inspect O-Ring; reinstall on trap.
Replace trap cover and handle ring on trap; turn handle ring clockwise to tighten cover.

NOTICE

Tighten trap cover handle ring by hand only (no wrenches)!
Pump should prime now. Priming time will depend on vertical length of suction lift and horizontal length of suction piping.
If pump does not prime, make sure that all valves are open, suction pipe end is under water, and that there are no leaks in suction pipe.

4 Routine Maintenance

The only routine maintenance needed is inspection/cleaning of trap basket. Debris or trash that collects in basket will choke off water flow through the pump. Follow instructions below to clean trap:

1. Stop pump, close valves in suction and discharge, and release all pressure from system before proceeding.
2. Remove trap cover handle ring (turn counterclockwise). If necessary, tap handles gently with a rubber mallet.
3. Remove strainer basket and clean. Be sure all holes in basket are clear, flush basket with water and replace in trap with large opening at pipe connection port (between ribs provided). If basket is replaced backwards cover will not fit on trap body.
4. Clean and inspect lid O-Ring; reinstall on trap.
5. Clean O-Ring groove on trap body and replace cover and handle ring. To help keep cover from sticking, tighten hand tight only.
6. Prime pump (see priming instructions).

5 TROUBLE SHOOTING

MOTOR DOES NOT START

1.Disconnect switch or circuit breaker in off position.
2.Fuses blown or thermal overload open
3.Locked motor shaft
4.Motor windings burned out
5.Defective starting swithc inside single phase motor
6.Disconnected or defective wiring
7.Low voltage

LOW PUMP CAPACITY

1.Valve in suction or discharge line partly closed
2.Suction or discharge line partly plugged.
3.Suction or discharge line too small
4.Plugged basked in skimmer or hair and lint strainer
5.Dirty filter
6.Impellor clogged

PUMP DOES NOT REACH FULL SPEED

1.Low voltage
2.Pump connected for wrong voltage

MOTOR OVERHEATS (Protector trips)

1.Low voltage
2.Motor windings connected for wrong voltage on dural voltage model
3.Inadequate vertilation

PUMP DELIVERS NO WATER

1.Pump is not primed
2.Closed valve in suction or discharge line
3.Leakage or air into suction system
4.Impellor clogged

LEAKAGE OF WATER AT SHAFT

1. Shaft seal requires replacment

HIGH PUMP PRESSURE

1.Discharge valve or inlet fittings closed too much
2.Return lines too small
3.Dirty filters

NOISY PUMP AND MOTOR

1.Plugged basked in skimmer or hair in lint stainer
2.Worn motor bearings
3.Valve in suction line partly closed
4.Suction line partly plugged
5.Vacuum hose plugged or too small
6.Pump not supported properly

AIR BUBBLES AT INLET FITTINGS

1.Leakage of air into suction line at connections or valve stem
2.Cover gasket of hair and lint strainer needs cleaning
3.Low water level in pool

6 Repair parts list

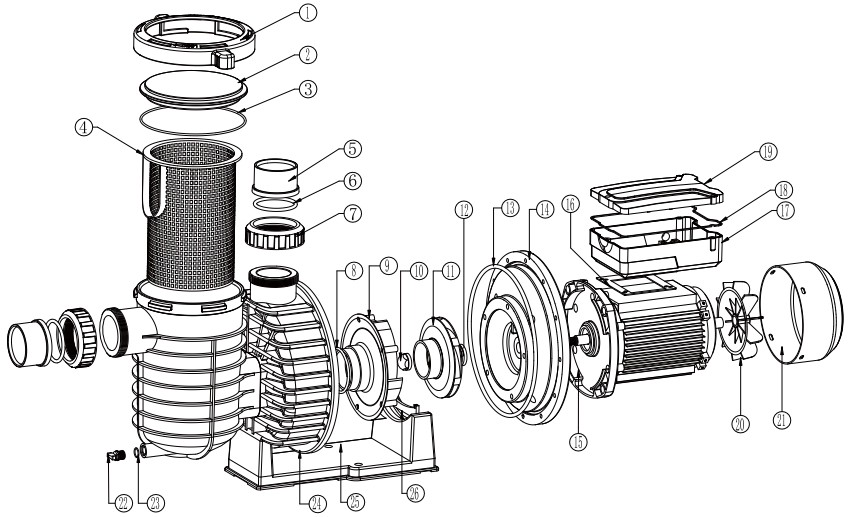

WL-BHP SERIES

Item	Designation	Item	Designation	Item	Designation
1	Pump head lock nut	10	Impeller nut	19	Capacitor box top cover
2	Transparent cover	11	Impeller	20	Motor fan
3	Transparent cover O-ring	12	Mechanical	21	Fan cover
4	Filter basket	13	Seal plate O-ring	22	Drain plug
5	Pipe fitting	14	Seal plate	23	Drain plug O-ring
6	Pipe fitting O-ring	15	Front cover	24	Pump body
7	Union nut	16	Capacitor box rubber pad	25	Base
8	Diffuser O-ring	17	Capacitor box bottom cover	26	Motor pad
9	Diffuser	18	Capacitor box O-ring		

7 Dimensions and Technical Parameters Table

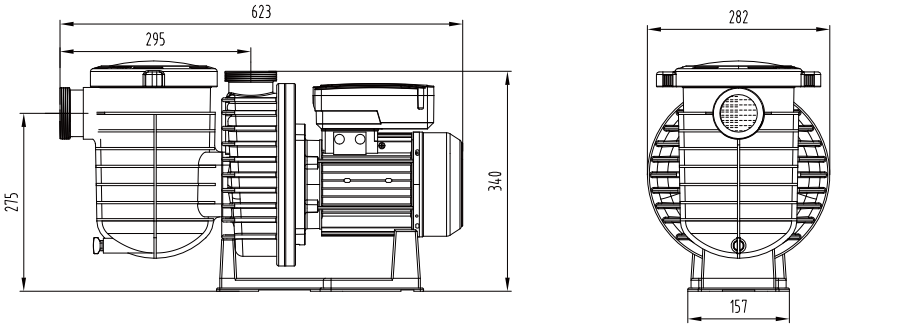

Model	Horsepower (HP)	Phase	Rated Power (KW)	Inlet size (inch)	Outlet size (inch)	Voltage (V)	Length A (mm)	Width B (mm)	Height C (mm)
WL-BHP200MS	2	1	1.9	2.0	2.0	220	623	282	340
WL-BHP300MS	3	1	2.2	2.0	2.0	220	623	282	340
WL-BHP200TS	2	3	1.9	2.0	2.0	380	623	282	340
WL-BHP300TS	3	3	2.2	2.0	2.0	380	623	282	340
WL-BHP400TS	4	3	2.8	2.0	2.0	380	623	282	340